BOLLARD SHOP

Product Data Sheet

BASE PLATE BOLLARDS

165-BP-1300-BLUE-5mm

Disabled Parking 165mm Base Plate Bollards – 1300mm Blue – 5mm Wall Thickness

A 1300 mm tall, 165 mm blue steel bollard for disabled parking bays and shared areas. It bolts straight down onto concrete, so there is no digging.

165 mm	1300 mm	5 mm	225 mm
Diameter	Height	Wall thickness	Base plate

SPECIFICATIONS

Code	165-BP-1300-BLUE-5mm
Material	**Galvanised steel**
Finish	**Hot dip galvanised, then powder coated**
Colour	**Blue**
Diameter	**165 mm**
Height	**1300 mm**
Wall thickness	**5 mm**
Base plate	**225 mm x 10 mm thick**
Plate holes	**4 x 16 mm**
Warranty	**2 year manufacturer warranty**

DRAWINGS

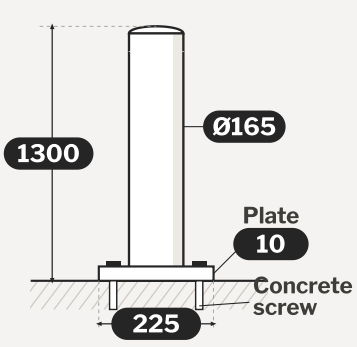

Side view (mm)

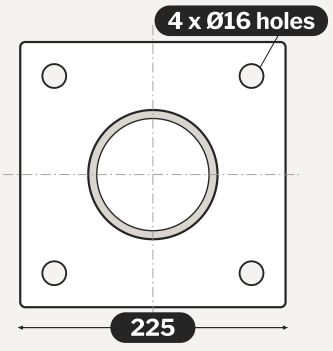

Base plate from above (mm)

Fixings not included. We recommend 75 mm x 12 mm concrete screws, 4 needed. Step-by-step installation guide (PDF). Drawings not to scale.

2 YEAR WARRANTY



Key features

- Galvanised against rust
- Fade-resistant blue powder coat
- 5 mm wall thickness
- No digging: bolts onto concrete
- 4 x 16 mm fixing holes in the plate

Other sizes in blue

165 mm 1300

Heights in mm. Some sizes also come with a 5 mm wall.

Scan for price, stock and online ordering

Talk to our team:

Call 1300 766 003

Request a quote