BOLLARD SHOP

Product Data Sheet

PEDESTRIAN GRAB RAILS

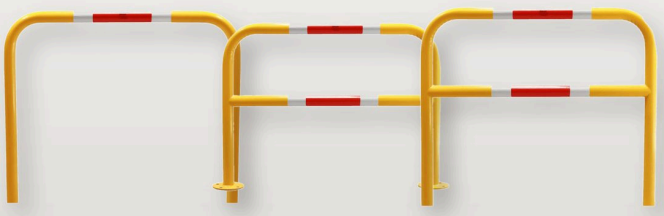

PB-BP-B-900

900mm Pedestrian Barrier Grab Rail Base Plate with Bar

A 900 mm wide steel grab rail that marks a safe path for people and gives them something solid to hold, keeping walkways separate from forklifts and vehicles in warehouses and car parks. The middle bar adds extra protection.

900 mm	900 mm	60 mm	4 mm
Width	Height above ground	Steel tube	Wall thickness

SPECIFICATIONS

Code	**PB-BP-B-900**
Width	**900 mm**
Height	**900 mm**
Diameter	**60 mm**
Wall thickness	**4 mm**
Material	**Galvanised steel**
Finish	**Hot dip galvanised, then powder coated**
Colour	**Safety yellow**
Reflective tape	**Class 1 reflective tape, red and white**
Warranty	**2 year manufacturer warranty**

DRAWINGS

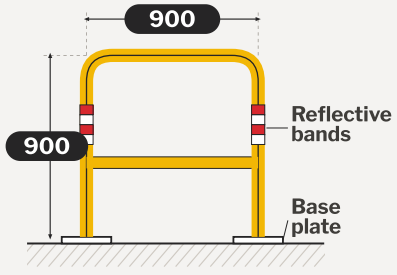

Front view (mm)

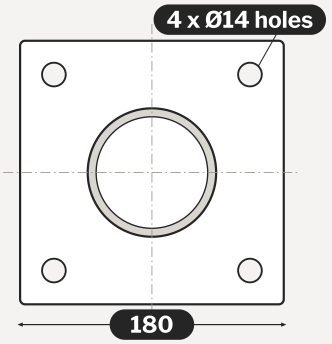

Base plate from above (mm)

Bolts down onto level concrete through the 4 x 14 mm holes in each base plate. Drawings not to scale.



Key features

- Galvanised, then powder coated yellow
- Red and white reflective bands
- 60 mm steel tube, 4 mm wall
- Middle bar for extra protection
- 180 mm base plate on each leg
- Bolts onto level concrete

Other grab rails

Plate	600	900	1200	1500
Plate + bar	600	900	**900**	1200
In-ground	600	900	1200	1500
Ground + ba	600	900	1200	1500

Widths in mm.

Scan for price, stock and online ordering

Talk to our team:

Call 1300 766 003

Request a quote