BOLLARD SHOP

Product Data Sheet

ANTI-THEFT MIRRORS



ATM-400

400mm Indoor Flexi Arm Anti-Theft Mirror

A 400 mm indoor mirror on a flexible arm, so you can angle it exactly where you need it. Ideal for blind aisle ends in stores and warehouses, and helps deter theft.

400 mm	130°	3–5 m	Flexi
Mirror diameter	View angle	Viewing distance	Adjustable arm

SPECIFICATIONS

Code	ATM-400
Mirror diameter	**400 mm**
View angle	**130°**
Lens	**High-grade PMMA (acrylic)**
Viewing distance	**3 to 5 meters**
Arm	**Heavy-duty flexible "gooseneck" arm**
Mounting	**Reinforced circular mounting flange with pre-drilled holes**
Warranty	**2 year manufacturer warranty**

DRAWINGS

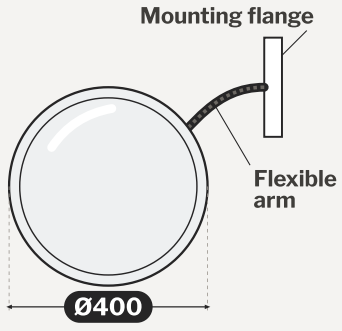

Front view (mm)



Product photo

For indoor use. Mounts to a wall or ceiling through the pre-drilled flange. Drawings not to scale.

2 YEAR WARRANTY



Key features

- Flexible gooseneck arm
- Easy to adjust the angle
- Shatter-proof acrylic lens
- 130° view angle
- Mounting flange with pre-drilled holes
- Ideal for shop aisles and counters

Other mirror sizes

Flexi arm 400 | 600 | 700

Diameters in mm.

Scan for price, stock and online ordering

Talk to our team:

Call 1300 766 003

Request a quote