BOLLARD SHOP

Product Data Sheet

# RETRACTABLE BOLLARDS

100-R-B

## 100mm Retractable Bollard

A 100 mm square carbon steel retractable bollard that lowers flush with the ground when vehicles need access, then raises to close the entry again. Ideal for driveways, car parks and loading bays.

| 100 x 100 mm | 530 mm | 732 mm | 4 mm |
|---|---|---|---|
| Square section | Above ground | In-ground depth | Wall thickness |

### SPECIFICATIONS

| | |
|---|---|
| Code | **100-R-B** |
| Size | **100 x 100 mm square** |
| Above ground | **530 mm** |
| In-ground depth | **732 mm** |
| Wall thickness | **4 mm** |
| Material | **Carbon steel** |
| Finish | **Zinc plated** |

### DRAWINGS

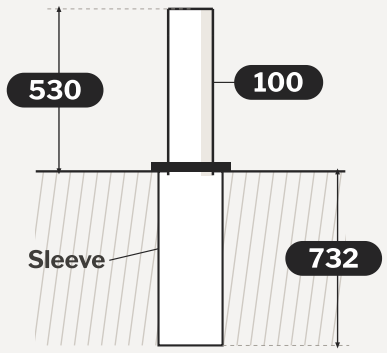


Raised (mm)

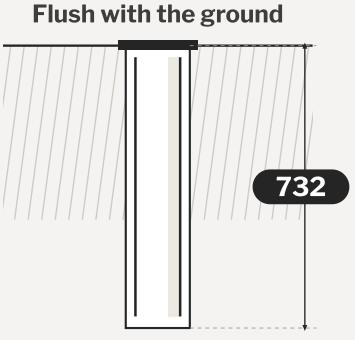


Lowered (mm)

**Set in a concrete footing.** Call us for help planning the footing for your site. Drawings not to scale.



### Key features

- Lowers flush with the ground
- Square 100 x 100 mm section
- High-strength carbon steel
- Zinc plated against rust
- 4 mm wall thickness
- 732 mm in-ground depth

### Other retractable bollards

**114 mm** Yellow Stainless

**Scan for price, stock and online ordering**

Talk to our team:

**Call 1300 766 003**

Request a quote